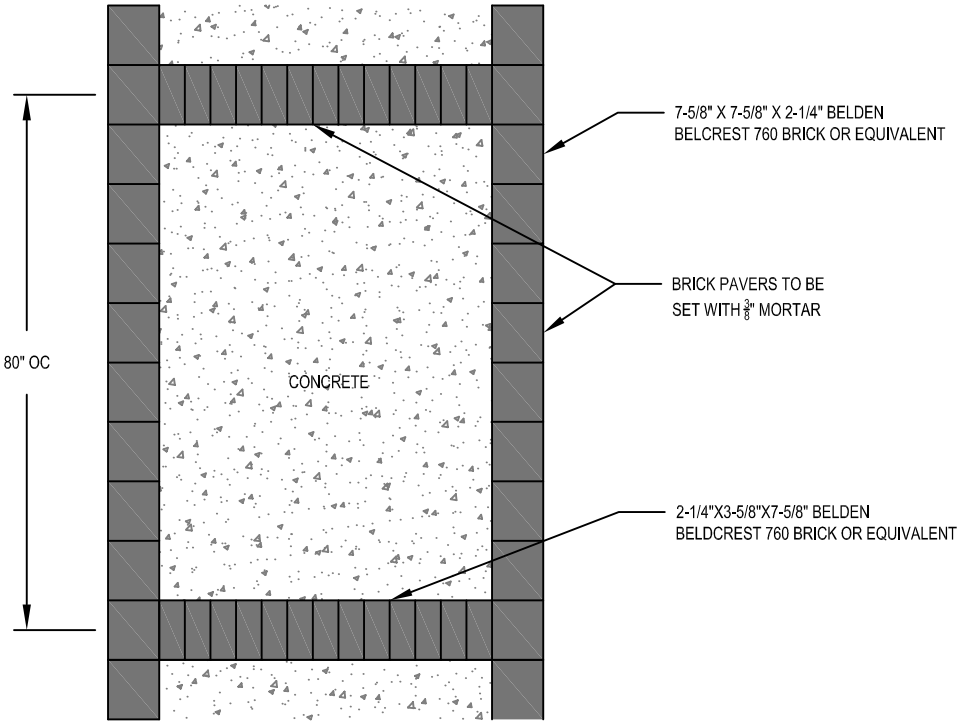

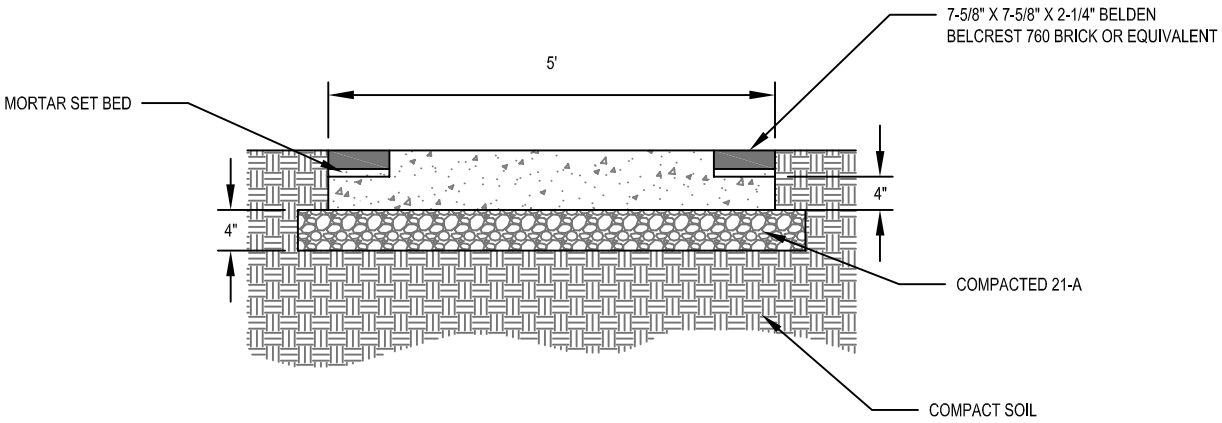

BRICK BANDED SIDEWALK

TOWN OF VIENNA
since 1890

SCALE N.T.S	TOWN OF VIENNA, VIRGINIA DEPARTMENT OF PUBLIC WORKS	
SHEET 1 of 1		2021-05-17 DATE/REVISION